Audio Guide Charger ATC-110
Audio Guide Updater ATC-110U

[USER MANUAL]

PREFACE:

Thank you for the purchase of Audio Guide Charger ATC-110 and Audio Guide Updater ATC-110U. This user manual contains comprehensive description in operation. Please read it over carefully before your use.

This series should work with Audio Guide AT-100. Please refer to AT-100 user manual for further information.

INDEX:

Audio Guide Charger ATC-110
Audio Guide Updater ATC-110U

Illustration..... 1~4
How to use..... 5~6
Caution / Troubleshooting..... 7
Specifications..... 8
Memo..... 9~12

ILLUSTRATION

Audio Guide Charger ATC-110

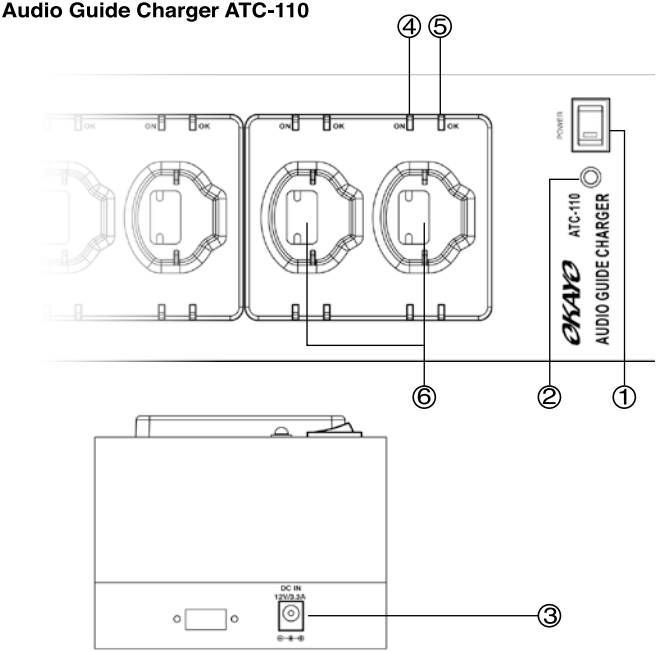

ILLUSTRATION

Audio Guide Charger ATC-110

There are 10 charging slots available on this device (shown as photo). More details described as below.

① Power switch: Switch to power on; switch to power off.

② Function indicator: To identify the device is on charging (indicator lights redly) or shut down (indicator turns off).

③ Power input: For power supply DC 12 V / 3.3 A.

④ Charging indicators (ON): “ON” indicator lights amber when charging.

⑤ Fully charged indicators (OK): “OK” indicator lights greenly when fully charged.

⑥ Charging slots: Locate AT-100 to charge. This device allows 10 pcs of AT-100 to be charged at the same time.

ILLUSTRATION

Audio Guide Updater ATC-110U

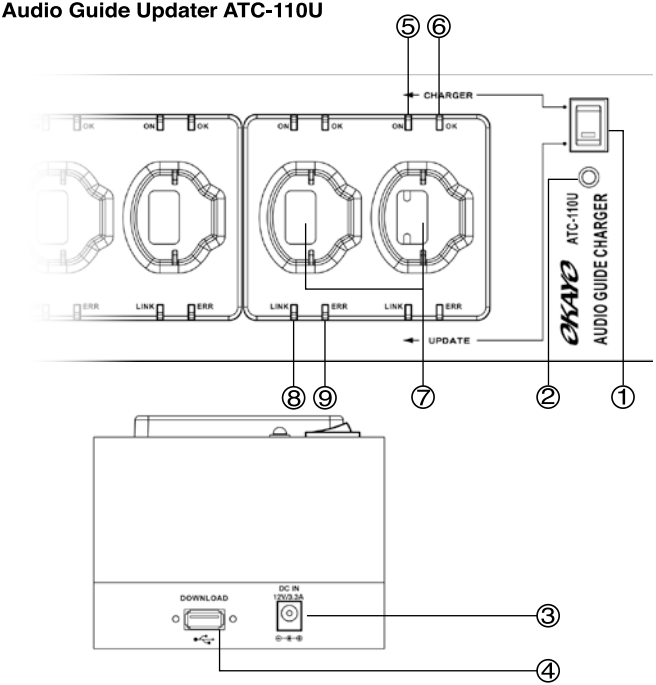

ILLUSTRATION

Audio Guide Updater ATC-110U

This device has 10 slots for AT-100 to charge and update (shown as photo), details described as below.

① Power switch: Two switches available, one for charging mode and the other for updating mode.

② Function indicator: LED indicator lights redly when charging; or it lights greenly when updating.

③ Power input: For power supply DC 12 V/3.3 A.

④ USB port: To link with a laptop or computer to implement update.

⑤ Charging indicators (ON): “ON” indicator lights amber when charging.

⑥ Fully charged indicators (OK): “OK” indicator lights greenly when fully charged.

⑦ Charging slots: Locate AT-100 to charge or to update. This device allows 10 pcs of AT-100 to be charged or updated at the same time.

⑧ Link indicator: The indicator will light greenly when linking with a laptop or computer correctly.

⑨ Error indicator: The indicator will light redly when linking with a laptop or computer incorrectly.

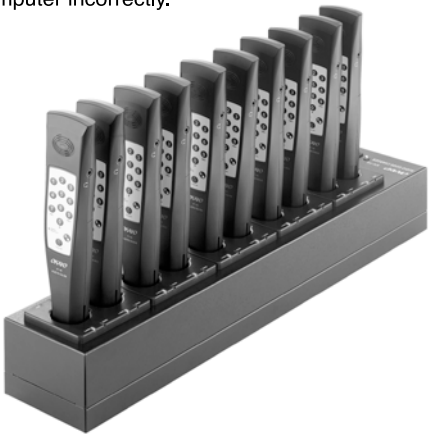

HOW TO USE

A. Used as a charger: ATC-110 / ATC-110U

1. When AT-100 gives a sign of low battery (must be NiMH rechargeable batteries), please allocate it onto ATC-110 or ATC-110U for charging. Steps listed as below.

   a. Turn the AT-100 off.
   b. Plug the power supply DC 12 V/3.3 A to power input.
   c. Turn on the power and switch it to charging mode.
   d. Allocate AT-100 on any slot and the charging indicator “ON” lights amber.
   e. The fully charged indicator “OK” will light greenly when it’s done.

Power input jack.

2. AT-100 does not react when in charging. (no LED indicator will light up)

3. ATC-110 or ATC-110U allows maximum 10 pcs AT-100 to be charged concurrently.

4. Remarks:

   a. Indicator “ON” lights up when ch dicator “OK” lights up when fully charged.
   b. When indicator “ON” lights and glitters, please make sure batteries are in good condition or batteries are NiMH rechargeable.
   c. ATC-110 or ATC-110U will keep supplying tiny current to AT-100 when it’s fully charged (indicator “OK” lights up) but not been removed from charger, to ensure battery energy in AT-100 are full.

⚠ CAUTION

1. Disposable batteries are NOT allowed to be charged.
2. DO NOT mix new battery and old battery to use, in case of any risk of leakage or explosion will arise.
3. Please take out batteries when the device won’t be used for a long time, to avoid any leakage.

HOW TO USE

B. Used as an updater: ATC-110U

1. When files in AT-100 need to be changed, removed, deleted or updated, the Audio Guide Updater ATC-110U will be required.
2. Steps to update described as below:
   a. Turn the AT-100 off.
   b. Plug power supply 12 V/3.3 A to power input.
   c. Turn the ATC-110U on and switch it to “update mode”.
   d. Connect ATC-110U with a laptop (or computer) via USB cable.
   e. Allocate AT-100 onto any slot of ATC-110U. The indicator “LINK” lights greenly when the linkage is successful. The linkage isn’t successful when indicator “ERR” lights redly.
   f. Implement updating program “Audio Guide AT-100 Series” shown on laptop (or computer). Update program required to be installed for use in first time.

⚠ CAUTION

1. Before putting AT-100 onto charger (ATC-110) or updater (ATC-110U), please make sure AT-100 is POWER OFF.
2. It might cause problems when putting AT-100 onto charger or updater without turning it off first.
3. Refer to “troubleshooting” for more information that you might need.

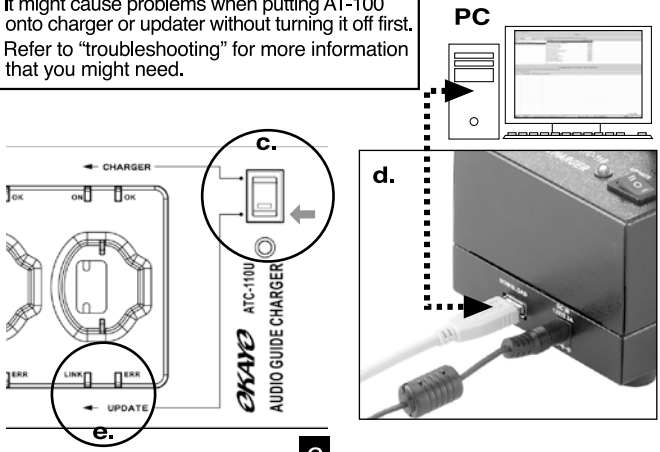

CAUTION

1. Keep away from heating source; don't put the unit next to any object with high heat or temperature.
2. Inappropriate move or squeeze is prohibited.
3. DO NOT use rechargeable and general batteries together. DO NOT mix old and new batteries to charge.
4. Put the charger or updater on a flat table, or have it mounted on the wall.
5. Recommend to use power supply DC 12V / 3.3A that comes along with the device.
6. Please take out batteries if the units won't be in use for a longer period in case of any leakage from batteries.

TROUBLESHOOTING

When you meet abnormal problems during updating process to AT-100, please follow instructions below to sort out.

1. Turn AT-100 off.
2. Put AT-100 onto the slot of updater (ATC-110U).
3. Turn ATC-110U on and switch it to "update" mode.
4. Format AT-100.
5. Remove AT-100 from updater safely.
6. Turn AT-100 on and keep it up for 5~6 seconds.
7. The AT-100 should be working well now, please try to update again.
8. Remind again; make sure to turn AT-100 off before implementing update. It might cause AT-100 contained data failed or damaged if you DO NOT turn it off.
9. If you still can not sort out the update problem after trying solution mentioned above, please check if your system was infected by virus.

SPECIFICATION

ATC-110 10-slot Charger

Charging slot	10 slots
Power requirement	AC 100~240 V, DC 12 V/3.3 A switching adapter
Charging LED indicator	ON – charging (lights amber), ON – failed battery (glitters amber), OK – fully charged (lights greenly)
Charging current	330~350 mA (single slot)
Time to charge	5~6 hours (1600 mAh NiMH rechargeable battery)
Size	D 110 x W 55 x H 95 (mm)
Weight	2.5 kg

ATC-110U 10-slot Updater

Updating (Charging) slot	10 slots
Power requirement	AC 100~240 V, DC 12 V/3.3 A switching adapter
Charging LED indicator	ON – charging (lights amber), ON – failed battery (glitters amber), OK – fully charged (lights greenly)
Updating LED indicator	LINK – connection ok (lights greenly), ERR – connection failed (lights redly)
Charging current	330~350 mA (single slot)
Time to charge	5~6 hours (1600 mAh NiMH rechargeable battery)
Support OS	Windows 2000 / ME / XP etc.
Download interface	USB 1.1 / 2.0
Download speed	1 Mbps
Size	D 110 x W 55 x H 95 (mm)
Weight	2.6 kg

MEMO

MEMO

MEMO

MEMO

OKAYO

Sound & Communication

E-J ELECTRONICS CO., LTD.

4F, No.11, Lane 125, Sec 1, Kuo Kwang Rd., Ta Li City,
Taichung Hsien, Taiwan

Tel:+886-4-2407-1617 Fax:+886-4-2407-1609

E-mail:okayo@okayo.com

www.okayo.com

Ver 1.0